SMART WATER SERIES

智能水务系列

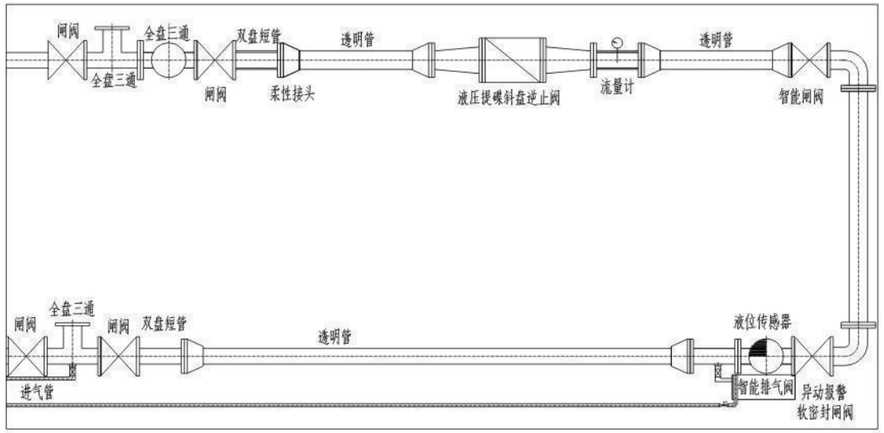



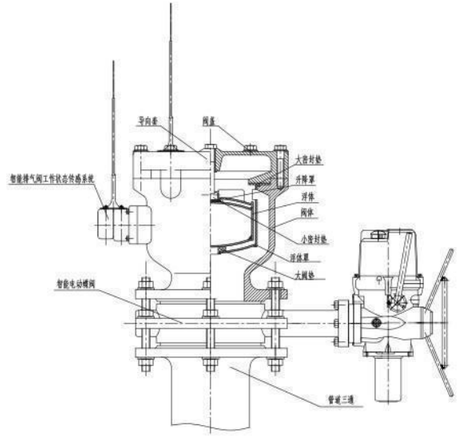

智能排气阀用双向翻斗式气体微流量计量装置：

Intelligent exhaust valve microflip metering device with two-way hopper gas:

双向翻斗式气体微流量计量装置原理示意图

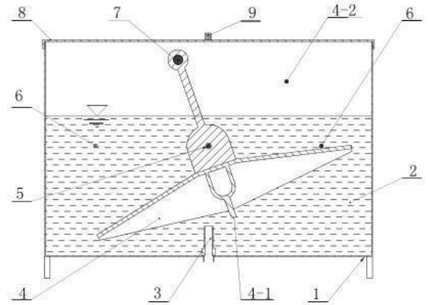

1、容器
2、液体
3、进气嘴
4、双向翻斗
4-1、双向翻斗中隔板
4-2、气室
5、转轴
6、限位轴
7、永久磁铁
8、容器盖
9、磁敏感元件

通过标定脉冲对应的气体体积，计量脉冲信号的周期或频率，即可准确测定气体的流量。通过借助与物联网通信组件可实现在线检测排气阀排气状况，可用电脑或手机实时观测，遇排气阀排气失效或排水无法关闭大阀口时，将发出报警信号，提示排气阀发生异常。

By calibrating the volume of the gas corresponding to each pulse, the cycle or frequency of the pulse signal can be measured accurately. Online detection of exhaust valve exhaust conditions can be achieved with the help of communication components with the Internet of Things, real-time observations can be made from a computer or mobile phone, and an alarm signal will be sent when the exhaust valve exhaust fails or drainage fails or drainage cannot close the large valve port, indicating an abnormality in the exhaust valve.

智能排气阀带液位传感器装置：

Smart exhaust valve with level sensor device:

若排气阀井内积存的水达到设定水位，液位变送器将感应到的水位信号传送到控制器，控制器内的计算机将实测的水位信号与设定信号进行比较，得出偏差，然后根据偏差的性质，向检修电动阀发出"关"的指令，排气阀下面的电动阀关闭，排气阀停止进排气。从而避免了阀井内污水杂物进入排气阀，造成管内水质的污染或因杂质导致排气阀关闭失灵而造成管内水不断外流等事故的发生。

If the water accumulated in the exhaust valve well reaches the predetermined water level, the level transmitter will feel the water level signal transmitted to the controller, the computer in the controller will be measured water level signal and set signal comparison, to obtain deviation, and then according to the nature of the deviation, to the water electric valve issued a "off" instructions, the electric valve under the exhaust valve closed, the exhaust valve to stop the intake of exhaust. Thus, it avoids the occurrence of the drainage accident of water source in the pipe after the water debris enters the exhaust valve.

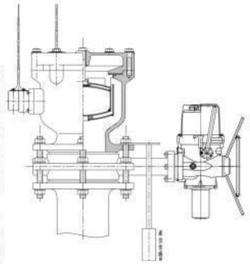



异动报警式软密封闸阀DN50～DN200

HETERO-ALARM SOFT SEAL GATE VALVE DN50～DN200

管网阀门状态监控技术是基于JMZ45X加密锁闭闸阀基础上研制出来的报警型加密闸阀,其技术原理是在原有磁性加密结构的基础上,增加了阀头动作磁感应机构，解析阀头动作并借助与物联网通信组件将阀头动作信息上传至数据中心，通过对信息的分析判断阀门异动状态，做出报警提示。

Pipe network valve status monitoring technology is based on JMZ45X encrypted lock valve based on the development of alarm-type encryption gate valve, its technical principle is based on the original magnetic encryption structure, the addition of the valve head motion magnetic induction mechanism, analysis of the valve head action and with the help of the Internet of Things communication components to upload the valve action information to the data center, through the analysis of information to determine the valve movement status, make alarm prompts.

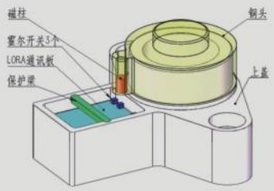

图1阀头结构图

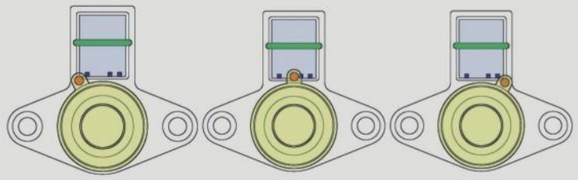

图2 磁柱顺时针转摆过程



智能软密封闸阀DN50～DN1200

SMART SOFT SEAL GATE VALVE DN50～DN1200

智能电动（兼手动）软密封闸阀，可通过手机或电脑实现本地操作和远程操作启闭阀门，可实现闸板开度的任意调整。

Intelligent electric (and manual) soft seal valve, local operation and remote operation of the valve can be achieved through mobile phone or computer opening and closing valve, can achieve any adjustment gate opening.

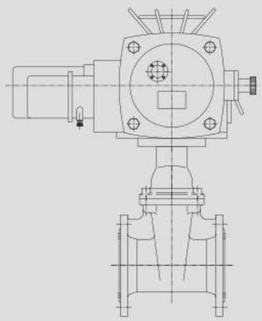



提碟斜盘止回阀DN100～DN2000

DISC RECLINING DISC CHECK VALVE DN100～DN2000

具有无撞击闭合、耐磨、防渗漏的阀座和通用性操作等特性，可轻松应对复杂工况，实现高效节能运行。这种止回阀在不同工况下，水头损失最小，运营成本低，在现有的所有止回阀产品中它的压力损失是最低。

With impact-free closure, wear resistance, leak-proof seat and versatile operation, it is easy to handle complex operating conditions for efficient and energy-efficient operation. This check valve has the lowest head loss and low operating costs under different operating conditions, and the lowest pressure loss of all existing check valve products.

特点：

peculiarity:

1、大于全通径的40%过流面积设计，流阻系数小。

2、具有较短的行程，开启角度只有40°，大大缩短启闭时间。

3、缓闭功能：阀门最后10%的行程通过液压缓冲器，有效防止水锤的产生。

1, greater than 40% of the total diameter of the overcurrent area design, flow resistance coefficient is small.
2, with a shorter stroke, the opening angle is only 40 degrees, greatly shortening the opening and closing time.
3, slow-closing function: the last 10% of the valve travel through the hydraulic buffer, effectively prevent the production of water hammer.

阀盘反作用提供自我缓冲效应

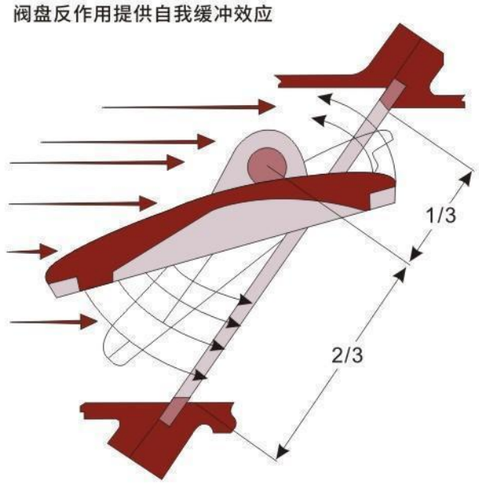

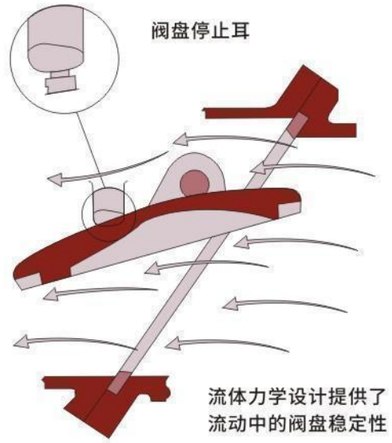

VALVES FOR PUMPING ROOMS (STATIONS)

泵房（站）用阀门

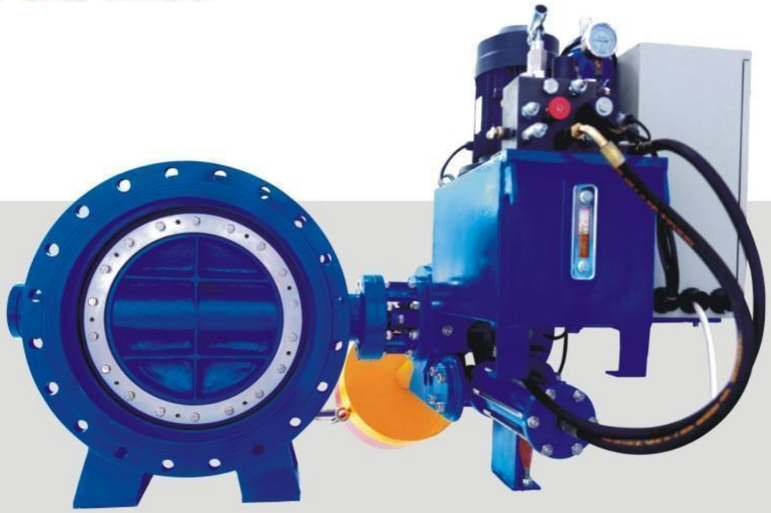

重锤式自动保压控制缓闭止回蝶阀DN300～DN2000

HAMMER-TYPE AUTOMATIC PRESSURE CONTROL SLOWLY CLOSES THE CHECK-BACK BUTTERFLY VALVE DN300～DN2000

用途：该阀门主要安装于水利、电力、给排水等各类泵站的水泵出口，具备止回阀和蝶阀功能。

Application: The valve is mainly installed in water conservancy, electricity, water supply and drainage and other types of pumping station pump outlet, with check valve and butterfly valve function.

特点：

1、具备快开、快关和末端10°左右开始缓闭开始缓闭等功能。
2、由于带有缓闭功能，具备消除水锤功能。
3、具备节能功能，在重锤的作用下自动关闭。
4、阀门全开时，若断电可保持全开功能。

peculiarity:
1, the valve has fast opening, fast closing and the end of about 10 degrees to start slow closure.
2, because of the slow-closing function, with the elimination of water hammer function.
3, with energy-saving function, do not need electricity can be turned off.
4, valve fully open, if the power failure can maintain the full open function.

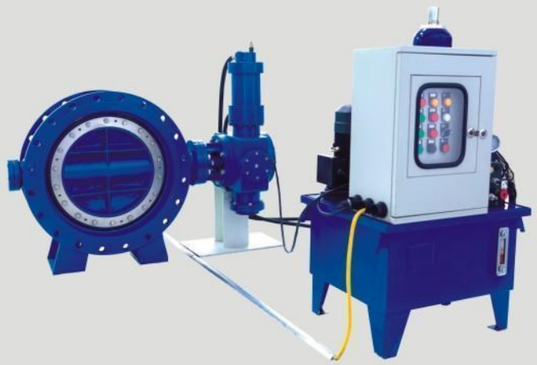

蓄能液控缓闭止回蝶阀DN300～DN2000

THE STORAGE FLUID CONTROL SLOWLY SHUTS DOWN THE CHECK-BACK BUTTERFLY VALVE DN300～DN2000

用途：该阀门主要安装于水利、电力、给排水等各类泵站的水泵出口，具备止回阀和蝶阀功能，利用液控系统控制阀门启闭。

Use: The valve is mainly installed in water conservancy, electricity, water supply and drainage and other types of pumping station pump outlet, with check valve and butterfly valve function, the use of liquid control system to control valve opening and closing.

1、该阀门具备快开、快关和末端10°左右开始缓闭。
2、由于带有缓闭功能，具备消除水锤功能。

1, the valve has fast opening, fast closing and the end of about 10 degrees to start slow closure.
2, because of the slow-closing function, with the elimination of water hammer function.



液控半球阀DN300～DN2000

LIQUID-CONTROLLED HEMISPHERICAL VALVE DN300～DN2000

用途：主要安装在水利、电力、给排水等各类泵站的水泵出口，具备蝶阀和闸阀的功能，利用液控系统控制阀门启闭。

Application: mainly installed in water conservancy, electricity, water supply and drainage and other types of pumping station pump outlet, with butterfly valve and gate valve function, the use of liquid control system to control valve opening and closing.

1、该阀门具备快开、快关和末端10°左右开始缓闭，具有消除水锤功能。
2、可以预设启闭时间、开启角度。
3、全通道设计，流阻系数小。

1, the valve has fast opening, fast closing and the end of about 10 degrees to start slow closure, with the elimination of water hammer function.
2, can preset the opening and closing time, open angle.
3, full channel design, flow resistance coefficient is small.

WATER SUPPLY AND DRAINAGE SERIES VALVES
给排水系列阀门



YL942X型活塞式调流调压阀DN150～DN2000
YL942X TYPE PLUNGER VALVE DN150～DN2000

活塞式流量调节阀是根据流体力学特性而开发出来的调速调压型阀门。已经在电站、引水、供水等领域得到了广泛的应用。经过改进的本系列流量调节阀不但适用于清水，对于天然江河湖泊水、轻度污水具有良好的耐受能力，从设计结构和材料选用上解决了多年来流量调节阀易结垢，卡阻，驱动装置偏大的难题。

The valve is designed according to hydrodynamics, to control the speed and the pressure. I's widely used in power stations, water supply and other fields. It's not only suitable tor the drinking water, also has good resistance to natural rivers and lakes water, mild sewage. It solves the problem of easy fouling, obstruction and large driving device of flow regulating valve.



Z45T-10/16Q楔式板闸阀DN80～DN1800
Z45T-10/16Q WEDGE GATE VALVE DN80～DN1800

适用于公称压力PN1.0MPa-1.6MPa,工作温度-29℃～550℃的石油、化工、水力、热力、火力电站各种系统的管路上，切断和接通管路介质。适用介质为：水、油品、蒸汽及酸、碱、氨、尿素、含硫天然气等。操作方式有：手动、齿轮传动、电动、气动等。

Suitable for nominal pressure PN1.0MPa to 16.0MPa, operating temperature -29 degrees C to 550 degrees C of the petroleum, chemical, hydraulic, thermal, thermal power station systems of the pipeline, cut off and connect the pipeline media. The applicable media are: water, oil, steam and acid, alkali, ammonia, urea, sulfur-containing natural gas and so on. Operating methods are: manual, gear drive, electric, pneumatic and so on.



MSZ45X型直埋式软密封闸阀DN150～DN600
MSZ45X TYPE DIRECT BURIED RESILIENT-SEATED GATE VALVE DN150～DN600

该产品可在施工时将阀门直接埋入地下，不用垒砌窨井，减少路面开挖面积，节省空间位置，保持路面美观，降低施工难度，降低工程造价成本，并可根据阀门埋设深度与地面之间的距离任意调节，另外该产品具有长期使用不泄漏，免维护等优点。

The valve can be buried directly during the installation, without valve well. It can reduce the excavation area on the road, save space, keep the road surface beautiful, reduce the construction difficulty, reduce the cost. The valve can be adjusted freely according to the distance between the buried depth of the valve and the ground. Besides, the product has the advantages of years of trouble-free operation and no maintenance.

防盗软密封闸阀
ANTI-THEFT SOFT SEAL GATE VALVE

DN50～DN300



该阀门是对部分单位或个人无节制用水、拒交水费、偷漏水、甚至破坏管道阀门等现象，有效的管理手段，阀门启闭需用专用扳手(钥匙)操作，顺时针关、逆时针开。

The valve is designed to avoid uncontrolled using water, refused to pay water charges, leakage theft and even broken the valve. The valve will open and close by special wrench, like a key. Clockwise to close and counterclockwise to open.

Z945X型电动软密封闸阀
Z945X TYPE ELECTRIC RESILIENT-SEATED GATE VALVE

DN50～DN1200



该阀门通过整体包胶闸板与阀体形成橡胶密封,具有操作扭矩小,使用寿命长、阀门底部无闸槽、零渗漏、在闸板受水压时，位移量小等特点，通过电动装置可实现远程控制。

The valve has been designed sealing with fully encapsulated resilient disc and the valve body, with small moment. longer service lite, no gate slot, zero leakage. small displacement when the wedge disc under pressure. It can add an electric device to realize remote control.

Z41X型明杆软密封闸阀
Z41X RISING STEM RESILIENT-SEATED GATE VALVE

DN50～DN400



该阀门通过整体包胶闸板与阀体形成橡胶密封,具有操作扭矩小，使用寿命长、阀门底部无闸槽、零渗漏、在闸板受水压时，位移量小等特点。

The valve is design with fully encapsulated resilient disc and the valve seat, with small moment, longer service life, no gate slot, zero leakage, small displacement when the wedge disc under pressure.

Z45X型暗杆软密封闸阀
Z45X TYPE DARK ROD SOFT SEAL GATE VALVE

DN50～DN1200



阀门上密封为3道"O"型橡胶圈，可在不停水的情况下更换。闸板采用楔式软密封副，启闭力矩小。阀体底部无闸槽，不会堆积杂物，流阻系数小，关闭严密零渗漏。

The valve is sealed with 3 "O" rubber rings and can be replaced with non-stop water. The gate uses a wedge soft sealing side, and the opening and closing torque is small. There is no gate slot at the bottom of the valve body, no debris will accumulate, the flow resistance coefficient is small, close the tight zero leakage.

Z15W型铜闸阀
Z15W COPPER GATE VALVE

DN15~DN50



Z15W型铜闸阀结构简单，密封性能好，启闭扭力小，操作轻便灵活，流阻系数小。广泛应用于给排水、市政、机械设备配套、城镇建设等领域。

The copper gate valve is simple in structure, good in sealing performance, small in opening and closing torque, flexible to operate and small in flow resistance. It's widely used in water supply and drainage, municipal, mechanical equipment, municipal construction and other fields.

刀型闸阀PZ73H、PZ973H、PZ673H、PZ573H型
KNIFE GATE VALVE, PZ73H,PZ973H, PZ673H, PZ573H TYPE

DN50~DN1200



刀型闸阀也叫刀闸阀，适用于带有悬浮颗粒、纤维材料的纸浆、污水、煤浆、灰渣水泥混合物等介质的管道，靠可以切割纤维材料的刀刃形闸板来切断这些介质。

Knife Gate Valve is applicable to pipeline with suspended solids, fiber pulp, sewage water, coal pulp, cement mixture, The . wedge bottom is made into a blade shape with the purpose to cut some soft material such as fiber and pulp.

D342X型法兰式双偏心软密封蝶阀
D342X FLANGE DOUBLE ECCENTRIC SOFT SEAL BUTTERFLY VALVE

DN300~DN4000



软密封蝶阀采用双偏心结构形式，蝶板桥式过流设计，阀门过流面积大、操作扭矩极小。304不锈钢阀座，退拔销锁轴牢固可靠。增加了蝶板调整螺母，使蝶板密封垫压缩量更均匀，减少和避免了在使用期间的维修，使用寿命长，具有很好的使用效益。

Soft-sealed butterfly valve adopts double eccentric structure, butterfly board bridge overcurrent design, valve overcurrent area is large, operating torque is very small. 304 stainless steel seat, retracing pin lock shaft solid and reliable. Added butterfly plate adjustment nut, so that the butterfly plate gasket compression is more uniform, reduce and avoid maintenance during use, long service life, with good use benefits.

手柄/蜗轮对夹式蝶阀（D71X/D371X型）
HANDLE/WORM GEAR WAFER BUTTERFLY VALVE (D71X/D371X TYPE)

DN50~DN800



对夹式蝶阀安装在管线两法兰中间，圆盘形蝶板绕着轴线旋转，旋转角度为0°-90°之间，旋转到90°时，阀门为全开状态，操作扭矩小，密封性能好，零渗漏，使用寿命长等特点。

The valve is installed between two flange in the pipeline, the disc rotate around the axis, the rotation angle between 0°- 90°. When rotate to 90°. the valve is fully opened. The valve has the characteristic of small moment, good sealing performance, longer service life, zero leakage.

手柄/蜗轮法兰蝶阀(D41X型/D341X型)
HANDLE/SNAIL WHEEL FLANGED BUTTERFLY VALVE (D41X/D341X)

DN50～DN1200



产品广泛应用于自来水、污水处理等领域给排水及其它流体管线上作调节及截流设备。

The valve is widely used in water, sewage treatment, water supply and drainage and other fluid pipelines, as the adjustment and Shutoff equipment.

D343H型三偏心硬密封蝶阀
D343H TYPE THREE ECCENTRIC HARD SEAL BUTTERFLY VALVE

DN80～DN1200



D343H型三偏心硬密封蝶阀，阀体阀座密封面堆焊硬质合金或不锈钢，密封面强度高、硬度好、耐磨损。上下阀轴装有自润滑耐磨轴套，大大提高了轴套的面压强度和使用性能，提高了蝶阀使用寿命。

D343H type three eccentric hard seal butterfly valve, valve body seat sealing surface welding carbide or stainless steel, sealing surface strength is high, good hardness, wear resistance. The upper and lower valve shafts are equipped with self-lubricating wear-resistant bushings, which greatly improves the surface pressure strength and performance of the bushings and improves the service life of the butterfly valve.

HQ41X型无磨损球形止回阀
HQ41X TYPE WEAR RESISTANCE BALL CHECK VALVE

DN50～DN200



该产品密封性能优越,无卡阻现象。安装方便,可立式安装，也可卧式安装。球形密封体灵敏度高，关闭速度快。密封球体用三元乙丙橡胶全包覆，阀体内设小角度螺旋导向滑道，回流时密封球能自动变换密封位置，摩擦力极微，使用寿命长。

The valve is designed with excellent sealing performance. no blocking phenomenon. It's easy to install vertical or horizontal. The sealing ball covering EPOM has high sensitivity and fast closing speed. A small angle spiral guide in the valve body, the sealing ball can automatically transform the sealing position during reverse flow. The valve has low friction, long service life.

H44X型橡胶瓣止回阀
H44X TYPE SWING FLEX CHECK VALVE

DN50～DN1000



橡胶瓣止回阀由阀体、阀盖、阀瓣等组成。主要用于给排水系统，石油、化工等工业部门的管道出口处，防止介质逆流。由于本产品的密封副采用倾斜设计，关闭时间短，可减小水锤压力,零渗漏。

The Valve consists of valve body, cover, and fully encapsulated resilient disc. Mainly used for pipeline in water supply, petroleum, chemical industry, to prevent flow in the reverse direction. Due to the utilizing an angled seat, the closing time is short, the water hammer can be reduced and zero leakage can be achieved.

HC42X型静音式止回阀
HC42X TYPE SIL ENT CHECK VALVE

DN50~DN1000



静音止回阀由阀体、阀座、导流体、阀板、轴及弹簧等零件组成。内部流道采用流线型设计，压力损失极小，阀瓣启闭行程很短，停泵时可快速关闭，清除巨大的水锤声，形成静音效果。

The valve is composed of valve body, valve seat, deflector, valve disc, shat and spring. The internal flow passage adopts streamlined design. small loss of pressure, the valve opening and closing with very short distance. When pump shut-down, the spring closes the disc rapidly. This type of closure reduces water hammer and provides “silent" operation.

HC42T型节能消音止回阀
HC42T TYPE ENERGY SAVING MUTE CHECK VALVE

DN50~DN1000



节能消音止回阀适用于给排水管道，阀板采用进出口两端中心轴导向，启闭灵活，可水平或垂直安装，阀板采用弹簧加载，其快速关闭能有效的消除水锤，密封性能好，关闭无噪音，具有体积小，重量轻，流体阻力小，耐疲劳，寿命长。

The valve is fit for water supply and drainage pipeline. The valve disc set on the central shaft between the inlet and outlet, flexible open and close. horizontal or vertical installation. The valve disc load with a spring. it can effectively eliminate water hammer by quick closing. It's of good sealing performance, closed without noise, small volume, light weight, small fluid resistance, fatigue resistance, long service life.

H14W型铜止回阀
H14W TYPE BRONZE CHECK VALVE

DN15~DN50



H14W型止回阀是依靠介质本身的流动而自动开、闭阀瓣，用来防止介质回流的阀门。此阀门采用旋启式结构，具有流阻系数小、性能稳定、使用寿命长、密封效果好等特点。

The valve open and close by the flow of the medium. to prevent flow in the reverse direction. This valve adopts the swing type structure. It has the advantages of small flow resistance coefficient. stable performance. long service life and good sealing effect.

HZL47X型活塞自力式斜盘逆止阀
HZL 47X SELF OPERATED PISTON SWASH PLATE CHECK VALVE

DN300~DN2000



活塞自力式斜盘逆止阀，具有流线型阀体轮廓，蝶阀式阀板设计允许流量从阀板两侧通过，流阻小、密封性能好、使用寿命长等特点，阀座设计为偏心圆锥结构，密封而无磨损。

The valve is designed with a streamlined valve body, butterfly valve disc allows the flow from both sides, small resistance, good sealing performance, long service life. The seat is designed with an eccentric cone structure. wear resistance of the sealing surface.

Q740H(X)型偏心半球阀

Q740H(X)TYPE ECCENTRIC SEMI- BALL VALVE

DN150-DN2000



偏心半球阀是目前国内外较先进的管路控制设备，主要安装于水利、电力、给排水等各类泵站的水泵出口,具备止回阀和闸阀的功能。

Eccentric Semi- Ball Valve is the advanced pipeline control equipment at home and abroad, mainly installed at the outlet of the pump of various types of pumping stations, such as water conservancy, power, water supply and drainage. It has the function of check valve and gate valve.

全通径球阀

FULL PASS BALL VALVE

DN80～DN1200



1、阀口为100%畅通孔径，全开时流动量等于阀门公称尺寸而无流通阻力，阀球能自行冲洗，可用于污水系统。
2、双弹性阀座紧密闭合，阀座固定在球上，阀内所有固定螺栓材质为不锈钢，压兰为整体或多块组成，熔模铸造，弹性阀座可现场调整及更换。
3、阀轴插入球的轴孔内，用锥形螺栓固定，牢固可靠。
4、具有铁氟龙内衬和玻璃纤维背衬的套筒轴承置于阀体轴孔内。
5、轴封为V型填料，更换时不必要将阀门从管线拆除或将阀轴从阀门内移除。

1, valve opening is 100% open aperture, full opening flow is equal to the nominal size of the valve and no circulation resistance, valve ball can be self-flushing, can be used in the sewage system.
2, double elastic seat close closed, seat fixed on the ball, all fixed bolt material in the valve is stainless steel, pressure or lan for the whole or more blocks of composition, melting mold casting, elastic seat can be on-site adjustment and replacement.
3, valve shaft inserted into the ball shaft hole, with tapered bolts fixed, firm and reliable.
4, with Teflon lining and fiberglass backing sleeve bearings placed in the valve body shaft hole.
5, shaft seal for V-type fillers, replacement is not necessary to remove the valve from the pipeline or the valve shaft removed from the valve.

BF(VSSJA-1)型单法兰松套限位补偿接头

BF(VSS JA-1)SINGLE FLANGE SLEEVE LIMITED EXPANSION JOINT

DN50～DN3000



BF(VSSJA-1)型单法兰松套限位补偿接头为排水管道、水塔、水泵、水表、阀门的安装拆换提供了极大方便，给长距离管中因温差变化引起的伸缩起到了很好的调节作用。

BF type Single Flange Sleeve Limited Expansion Joint provides great convenience for the installation and the replacement of the water pipe. water tower, pump, water meter and the valve. It plays a very good regulating role for the expansion caused by the change of the temperature difference in the long distance pipe.

AF型法兰松套补偿接头

AF FLANGE SLEEVE EXPANSION JOINT

DN50～DN3000



AF型法兰松套补偿接头主要由本体、压盖、橡胶密封圈组成，一端接阀门另一端接管道插管，便于阀门的安装与拆卸。

The AF type Flange Sleeve Expansion Joint is mainly composed of a main body, a gland and a rubber gasket. One end connect with the valve, and the other end connect with the spigot of pipe, I's easy for installation and disassembly of the valve.

CF(VSSJAFG)型 单法兰松套传力补偿接头

CF(VSSJAFG) TYPE SINGLE FLANGE SLEEVE JOINT FOR TRANSMISSION FORCE

DN50～DN3000



CF (VSSJAFG)型单法兰松套传力补偿接头是由法兰松套伸缩接头和短管法兰，传力螺杆等构件组成。它能传递被连接件的压力推力和补偿管路安装误差，不能吸收轴向位移。

CF Single Flange Sleeve Joint for Transmission Force is composed of flange. loose sleeve expansion joint and short flange pipe, transmission screw and other components. It can transfer the pressure, thrust and compensate pipe installation tolerance. It cannot absorb axial displacement.

C2F(VSSJAF)型双法兰 松套传力补偿接头

C2(VSSJAF) TYPE DOUBLE FLANGE SLEEVE JOINT FOR TRANSMISSION FORCE

DN50～DN3000



C2F(VSSJAF)型双法兰松套传力补偿接头，用于给排水管道的连接，拆装方便，能防止传递被连接件的压力推力和补偿管路安装误差。

C2F Double Flange Sleeve Joint for Transmission Force is used for the connection of the water supply and drainage pipelines. It's convenient to assemble and disassembe. It can transfer the pressure, thrust and compensate pipe installation tolerance.

JGD型可曲挠单头橡胶接头

JGD TYPE FLEXIBLE RUBBER EXPANSION JOINT

DN25～DN2000



JGD柔性管道橡胶接头广泛地使用于输送各种流体介质的泵站、泵房、采暖、空调、通风等泵体与管路的连接，拆装方便、强度高、使用寿命长等特点。

The joint is widely used in the transmission of various fluid media pump station,pipe station,heating ,airconditoner with pipe line with pipeline, It's easy to disassemble, high strength, long service life.

B2F (VSSJA-2)型双法兰 松套限位补偿接头

B2F (VSSJA-2) DOUBLE FL ANGE SLEEVE LIMITED EXPANSION JOINT

DN50～DN3000



B2F (VSSJA-2)型双法兰松套限位补偿接头主要用于给排水管路有振动，有一定角度或拐弯处的管路连接，拆装方便，能防止管道因超量位移导致管接头的泄漏、损坏或脱落。

B2F Double Flange Sleeve Limited Expansion Joint is mainly used at the place of vibration in the water supply and drainage pipelines, the connection of pipelines at a certain angle or corner. It's convenient to disassemble and assemble. It can prevent the leakage, damage or break 0ff of the pipe joint caused by excessive displacement of the pipe.

JBF型波纹管补偿器
JBF TYPE FLEXIBLE EXPANSION JOINT

DN40～DN600



这类膨胀节的优点是节省空间，节约材料，便于标准化和批量生产，波纹管膨胀节一般用于温度和压力不是很高、长度较短的管道上,随着波纹管生产技术水平的提高，这类膨胀节的应用范围正在扩大。

The joint has the advantages of space saving, material saving, easy standardization and mass production. I's normally used for temperature and pressure is not very high, short distance of pipeline. As the technical level improved, the application scope of the joint is expanding.

Y型过滤器
YTYPE FILTER

DN50～DN600



Y型过滤器主要为Y型管体内装圆筒状过滤网，拆下过滤器盖，清除垃圾，可为高层建筑、多层建筑或工厂内给排水配管中使用，常装置于减压阀、泄压阀、定水位阀或其它主要设备进口端，便于清理垃圾以保护阀类或设备正常使用。

Y-type filter is mainly equipped with a cylindrical filter in the Y-type pipe body. Remove the filter cover and remove garbage. It can be used in water supply and drainage piping in high-rise buildings, multi-storey buildings or factories. It is often installed in pressure reducing valves, Pressure relief valves, fixed water level valves or other main equipment inlets are easy to clean up rubbish to protect valves or equipment from normal use.

滤网伸缩器
MESH EXPANSION

DN80～DN200



本过滤器主要为上开口内插过滤板，拆下过滤器盖，可清除垃圾，可选配置伸缩接头，主要与水表配套使用，过滤杂质，保护水表计量器具的装置，产品壳体底部设有内螺纹丝堵形式的杂质排污口，便于杂质清除。

This filter is mainly a filter plate inserted in the upper opening, and the filter cover can be removed to remove garbage. It can be equipped with an expansion joint. It is mainly used with water meters to filter impurities and protect water meter measuring instruments. The bottom of the product shell is equipped The impurity drain port in the form of internal thread plug is convenient for impurity removal.

SECONDARY WATER SUPPLY SERIES VALVES
二次供水系列阀门



100X遥控浮球阀DN50～DN300
100X REMOTE CONTROL FLOATVALVE DN50～DN300

该阀由主阀、针阀、球阀与浮球阀等组成。遥控浮球阀能有效地控制水塔或水箱液面，适合切断或打开阀芯输入水流或阻止水流外泄。液位控制准确，水位不受压力波动干扰，关闭紧密不漏水，浮球灵活，维护保养简单。

The valve consists of the main valve, needle valve, ball valve and ball float valve and other components. Remote control ball float valve can effectively control the water tower or tank surface, which is suitable for cutting off or opening the spool input water or preventing water leakage. Level control is accurate, the water level is not disturbed by pressure fluctuations. the valve is closed tightly and watertight. the float is flexible, and the valve is easy to be maintained.



200X减压稳压阀DN50～DN300
200x PILOT CONTROL PRESSURE REDUCING VALVE DN50～DN300

减压稳压阀是一种利用介质自身能量来调节与控制管路压力的智能型阀门。用于生活给水、消防给水及其他工业给水系统，通过调节减压导阀，即可调节主阀的出口压力。

The valve is the intelligent valve using the energy of its media to adjust and control the pressure of the pipeline. Pressure regulator valve is used in area of living water, fire water supply and other industrial water supply system, by adjusting the pressure relief valve, it can adjust the outlet pressure of the main valve.



300X缓闭式逆止阀DN50～DN800
300x LOW SPEED CL OSED CHECK VALVE DN50～DN800

该阀由主阀、单向阀、针阀，球阀与压力表组成。缓闭式逆止阀具有开启和关闭速度调控的逆止功能，阀门安装后能有效控制水泵在启动与停止运转时自动调节到最佳开启与关闭的速度。

The valve consists of the main valve, check valve, needle valve, ball valve and pressure gauge. The slow closed check valve has the reverse function of opening and closing speed control. After the valve is installed, the pump can be effectively controlled, the pump is automatically adjusted to the optimum speed of opening and closing when started and stopped.

500X泄压/持压阀
500X PRESSURE SUSTAINING 1 RELIEF VALVE

DN50～DN300



泄压/持压阀由主阀利用水力自动操作，既可以作泄压阀用又可作持压阀用。泄压/持压阀作泄压阀用时，可维持供水管路压力在设定的安全值之下;泄压/持压阀做持压阀用，可维持主阀上游水压在设定值之上,保持主阀上游供水压力。

The valve can not only use as pressure relief valve, but also as a pressure holding valve by the main valve using hydraulic automatic operation. The valve as a pressure relief and holding valve, can maintain the water pressure below the safe value. It can also keep the upstream pressure of the main valve above the setting value to maintain the upstream water supply pressure.

600X水力电动控制阀
600X HYDRAULIC ELECTRIC CONTROL VALVE

DN50～DN300



水力电动控制阀通过电磁导阀可以实现对阀门开启和关闭的遥控。加装附加装置后，可控制开启和关闭的速度。水力电动控制阀利用导阀控制阀门的开启和关闭，节省能源。

The valve can remotely control the open and close through a electromagnetic pilot valve, thereby save energy. With a additional device, the speed of open and close can be controlled.

HH49X微阻缓闭蝶式止回阀
HH49X MCRO RESISTANCE LOW SPEED CLOSED BUTTERFLY CHECKVALVE

DN50～DN800



本系列止回阀通过快关和缓闭慢关的动作来消除水锤危害，保护水泵及管网系统安全。广泛应用于给水、排水工程系统，建筑、煤炭、电力、冶金、石化、水司、市政、环保部门，农业灌溉系统等行业的管道上，用来阻止介质逆流的理想装置。

This series check valve eliminates the water hammer harm through fast closing and slow closing to protect the water pump and pipe network system safety. It's widely used in the pipeline of water supply and drainage system, construction, coal, electric power, metallurgy. petrochemical, water division, municipal, environmental protection departments, irrigation system -and-other industries It's the ideal device prevent the medium backflow.

DFZX741X型倒流防止器(在线检修)
DFZX741X BACKFLOW PREVENTION ASSEMBLY

DN15～DN300



DFZX741X型倒流防止器(在线检修)是一种主要用于城市供水等供水单位向一般污水单位供水时严格限定管道中压力水只能单向流动的水力控制组合装置，它的功能是在供水系统发生虹吸倒流和背压回流的时候，能有效防止出口端水质较差的介质倒流到水质较好的进口端，避免了对生活饮用水的水质污染，确保生活供水的安全，达到避免倒流污染的目的。

DFZX741X Backflow Prevention Assembly (online maintenance) is a hydraulic control combination device, strictly limit the pressure water in the pipeline flow only in one direction. It's mainly used tor the city water supply unit to the sewage water supply units. When the backflow siphon and backpressure backflow occurs in the water supply system, it can effectively prevent the backflow of the bad quality water at the outlet into the better quality water at the inlet, to avoid the pollution of drinking water, ensure safety living water supply, to avoid the pollution by the backflow.

SDFQ4X型双止回阀型倒流防止器(法兰型)
SDFQ4X DOUBLE CHECK VALVE BACKFLOW PREVENTION ASSEMBLY (FLANGE TYPE)

DN15～DN300



主要用于城市供水单位向一般污染隐患单位供水时，严格限定管道中的压力水只能单向流动的水力控制组合装置，它的功能是在任何工况下，防止管道中的介质倒流，以达到避免倒流污染的目的。

I's a hydraulic control combination device, strictly limit the pressure water In the pipeline flow only in one direction. It's mainly used for the city water supply unit to the sewage water supply units. In any condition, to prevent the pipeline in the medium backflow or siphon backflow, in order to avoid the ollution due to the backflow.

DSBF711X型微型倒流防止器
DSBF711X MICRO BACKFLOW PREVENTION ASSEMBLY

DN15～DN50



微型倒流防止器是一种限定管道中的压力水只能单向流动的水力控制组合装置，它能最大程度防止用户管道中的介质倒流，确保供水安全，防止倒流污染，连接方式为内螺纹连接。

Micro Backflow Prevention Assembly is a hydraulic control device combination, the pressure water in the pipeline limited to only one-way flow. It can prevent the backflow of medium in a pipeline ate maximum extent, to ensure the safety of water supply, prevent backftlow pollution. It's of threaded connection.

Y43X型比例式减压阀
Y63X RATIO PRESSURE REDUCING VALVE

DN25～DN200



该阀门利用阀体内部活塞两端截面积不同产生的压力差，改变阀后的压力达到减压的目的，比例准确，工作平稳，寿命长，适用温度高，既可减动压，又可减静压，水平、垂直安装均可。

The valve use the pressure difference at two ends of the piston, where the cross section is different. Change the pressure behind the valve to decrease the pressure, It's of accurate proportion, stable operation, long service life, suitable tor high temperature. It can reduce the dynamic pressure and static pressure. It can be installed horizontally and vertically.



DN15～DN300

H41型止回阀

H41 Type Check Valve



DN15～DN300

H42型止回阀

H42 Type Check Valve



结构长度Dimensions：GB12221
法兰规范Flange Standard：
GB/T17241.6,JB/T79.1
本体、上盖材质Body and Bonnet
Matrial：CF8、WCB

DN15～DN300

H44型止回阀

H44 Type Check Valve



H11W型内螺纹止回阀1/2”～2”

H11W Internal Thread Check
Valve 1/2" to 2"



H11W型内螺纹止回阀1/2”～2”

H11W Internal Thread Check
Valve 1/2" to 2"



H14W型内螺纹止回阀1/2”～2”

H14W Internal Thread
Check Valve 1/2" to 2"



H17W型内螺纹止回阀1/2”～4”

H17W Internal Thread
Check Valve 1/2" ~ 4"



DN15～DN300

J41W/J41H/J41T型法兰截止阀

J41W/J41H/J41 Type Cut-off
Valve Flange Ends

结构长度 Dimensions：
GB12221
法兰规范Flange Standard：
GB/T17241.6,JB/T79.1
本体、上盖材质
Body and Bonnet Matrial：
CF8、WCB、QT450-10



DN15～DN300

Z41W/Z41H/Z41T型法兰闸阀

Z41W/Z41H/Z41T Flange Gate Valve

结构长度 Dimensions：GB12221
法兰规范Flange Standard：JB/T79.1
本体、上盖材质Body and Bonnet
Matrial：CF8、WCB



Z15W/Z15H型内螺纹闸阀1/2”～2”

Z15W/Z15H Type Internal Thread
Gate Valve 1/2" ~ 2"



**Q11F(B01)型一片式内螺纹
不锈钢球阀1/4”～2”**

Q11F(B01) Internal Thread
Stainless steel Ball Valve



**Q11F(B02)型二片式内螺纹
不锈钢球阀1/4”～2-1/2”**

Q11F(B02) Internal Thread Stainless steel
Ball Valve 1/4" ~ 2-1/2"



结构长度Dimensions：GB12221
螺纹规范Thread：GB/T7306.2

**Q11F(B03)型三片式内螺纹
不锈钢球阀1/4”～4”**

Q11F(B03) Internal Thread
Stainless steel Ball Valve 1/4" ~ 4"



结构长度Dimensions：Gb12221
螺纹规范Thread：GB/T7306.2

**SG11型内螺纹不锈钢
Y型过滤器2”～8”**

SG11 Type Internal Stainless
Steel Y Type Filter2" ~ 8"



J11W型内螺纹截止阀1/2”～2”

J11W Internal Thread Cut-off Valve 1/2”～2”

结构长度Dimensions：GB12221
螺纹规范Threaded：GB/T7306.2



DN15～DN200

Q41F型法兰球阀DN15～DN200

Q41F flange ball valve DN15 to Dn200

结构长度Dimensions：GB12221
法兰规范Flange Standard：JB/T79.1
本体、侧盖材质Body and Side Bonnet Matrial：CF8、WCB



DN50～DN300

法兰式软密封明杆闸阀

Rising Stem Soft Sealing Gate Valve Flange Ends



DN50～DN300

法兰式软密封明杆闸阀（带信号装置）

Rising Stem Soft Sealing Gate Valve Flange Ends With (Signal device)



DN50～DN300

沟槽式软密封明杆闸阀

Rising Stem Soft Sealing Gate Valve Groovved Ends



DN50～DN300

沟槽+法兰式软密封明杆闸阀

Rising Stem Soft Sealing Gate Valve Flange Ends Flanged X Grooved Ends



DN50～DN300

法兰式软密封暗杆闸阀

NON-Rising Stem Soft Sealing Gate Valve Flange Ends



DN50～DN300

法兰式软密封暗杆闸阀（带信号装置）

NON-Rising Stem Soft Sealing Gate Valve Flange Ends With (Signal device)



DN50～DN300

沟槽式软密封暗杆闸阀

NON Rising Stem Soft Sealing Gate Valve Grooved Ends



DN50～DN300

沟槽+法兰式软密封暗杆闸阀

NON-Rising Stem Soft Sealing Gate Valve Flange +Grooved Ends



DN50～DN300

法兰式软密封暗杆闸阀（带指示针）

NON Rising Stem Soft Sealing Gate Valve Flange Ends With Indicator



DN50～DN300

法兰式软密封暗杆闸阀（阀杆帽）

NON-Rising Stem Soft Sealing Gate Valve Flange Ends（Bonnet)



立式指示器

Vertical Indicator



墙式指示器

Wall Indicator



DN50～DN300

沟槽式蝶阀手柄驱动

Grooved Butterfly Valve with Handel Drive



DN50～DN300

沟槽式蝶阀蜗轮驱动/带微动开关

Grooved Butterfly Valve with Turbine Drive/Mirco Switch



DN50～DN300

沟槽式蝶阀蜗轮驱动

Grooved Butterfly Valve with Turbine Drive



DN50～DN300

中线对夹式蝶阀
蜗轮驱动/带微动开关

Mid Line Butterfly Valve with Turbine Drive/Mirco Switch



DN50～DN300

沟槽式止回阀

Grooved Check Valve



DN50～DN300

旋启式止回阀

Swing Check Valve



DN50～DN300

沟槽式Y型过滤器

Grooved Y Strainer



DN50～DN300

Y型过滤器

Y Strainer



手动对夹式蝶阀
Manual clip-on butterfly valve



螺旋传动对夹式中心型蝶阀
screw-driven clip-on concentric butterfly valve



蜗杆传动凸耳式中心蝶阀
worm-driven lug concentric butterfly valve



螺杆传动法兰式三偏心型蝶阀
screw-driven flange tri-eccentric butterfly valve



船用对夹式中心型蝶阀
Marine clip-on concentric butterfly valve



液动法兰蝶阀
liquid-operated flange butterfly valve



蜗杆传动双偏心凸耳型蝶阀
screw-driven flange double-concentric lug butterfly valve



船用对夹式中心型蝶阀
Marine clip-on concentric butterfly valve



气动对夹式蝶阀
air-operated clip-on butterfly valve



蜗杆法兰中心型蝶阀
worm-driven flange concentric butterfly valve



电动对夹式铜蝶阀
Electric clip-on butterfly valve

船用（操作形式：手柄、蜗轮、电动、气动、液动）蝶阀（对夹式中线蝶阀、法兰式中线蝶阀、法兰偏心蝶阀）（材质：铸铁、铸钢、青铜、不锈钢、铝合金）
适用于海水、淡水、空气、<70℃的原油

Marine butterfly valve (Operation form:valve handle,turbine, electric, air-perated, liquid-operated;
Valve type: clip-on concentric butterfly valve, flange concentric butterfly valve, flange eccentric butterfly valve;Material: ductile iron, cast steel, bronze, stainless steel, aluminium alloy)
Applying to seawater, fresh water, air, <70°C crude oil



GB/T1853-2008船用法兰铸钢舷侧截止止回阀
Marine flange Cast iron Broadside stop-check valve



CB/T3196-1995法兰铸钢海水截止阀
stainless steel globe valve



GB/T584-2008船用法兰铸钢截止阀
Marine flange cast steel globe valve



GB/T587 - 2008船用法兰青铜截止阀
Marine flange bronze globe valve



GB/T590- 2008船用法兰铸铁截止阀
Marine flange cast iron globe valve



GB/T595- 2008船用外螺纹青铜截止阀
Marine outside threaded cast steel globe valve



CB/T309-1999(GB 1848-84)
船用内螺纹青铜截止阀

Marine threaded broze globe valve



GB/T1951-2008
船用低压外螺纹 青铜截止阀

Marine outside threaded bronze globe valve



法兰青铜截止止回阀

Flange bronze stop-check valve



Cb299-1977胶管
接头青铜和黄铜截止阀

rubber sac connected bronze and brass globe valve



GB/T594-2008
船用外螺纹锻钢截止阀

Marine outside threaded forged globe valve



CB/T3942-2002
法兰不锈钢截止阀

Flange stainless steel globe valve

船用（材质：铸铁、铸钢、青铜、不锈钢）法兰截止阀，适用于海水、淡水、滑油、燃油≤300℃蒸汽使用。

Marine (material: cast iron, cast steel, bronze, stainless steel) flange cut-off valve, suitable for seawater, fresh water, oil, fuel ≤ 300 degrees C steam use.



GB/T592-1993船用法兰铸铁止回阀

Marine flange cast iron check valve



GB/T586-1999船用法兰铸钢止回阀

Marine flange cast steel check valve



GB/T589-1993船用法兰青铜止回阀

Marine flange bronze check valve



GB/T597-1983
船用外螺纹青铜止回阀

Marine outside threaded bronze check valve



CB/T3819-1999
板式止回阀

Wafer type check valve



CB300-1977胶管
接头青铜和黄铜止回阀

rubber sac connected bronze and brass globe valve



蝶形止回阀

Butterfly check valve

船用（材质：铸铁、铸钢、青铜、不锈钢）止回阀，适用于海水、淡水、滑油、燃油≤300℃蒸汽使用。

Marine check valve (Material: ductile iron, cast steel, bronze, stainless steel)Applying to seawater, fresh water, lubricating oil, fuel oil , ≤300°Csteam



CB/T465-1995
船用法兰铸铁闸阀

Marine flange cast iron gate valve



CB/T466-1995
船用法兰铸钢闸阀

Marine flange cast steel gate valve



CB/T467-1995
船用法兰青铜闸阀

Marine flange bronze gate valve



CB/T3955-2004
法兰不锈钢闸阀

Flange stainless steel gate valve





CB/T3591-2005
法兰油轮闸阀

Flange oiltanker gate valve

船用阀门
MARINE VALVES



刀型闸阀
Knife-type valve



美日标闸阀
American and Japan standard valve

船用（法兰铸铁、铸钢、青铜、不锈钢）闸阀
适用于海水、淡水、滑油、燃油等。温度不低于-165℃的气体运输船、散装化学品船、舰船的管路系统。

Marine (flange cast iron, cast steel, bronze, stainless steel) gate valves
Suitable for seawater, fresh water, oil, fuel and so on. A pipeline system for gas carriers, bulk chemical vessels, and ships with temperatures not less than -165 degrees ℃.

国标法兰青铜球阀

Flange bronze ball valve



美标不锈钢法兰球阀

Stainless steel flange ball valve



带快速接头球阀
Quick-coupling ball valve



国标不锈钢法兰球阀
Stainless steel flange ball valve



3片式球阀
3-piece type ball valve

船用球阀
连接形式：对夹、焊接、外螺纹、内螺纹、法兰连接，
材质：铸铁、铸钢、青铜、黄铜、不锈钢、铝合金

Marine ball valve
contact type: clip-on, welding, outside threaded, inside threaded, flange
Material: ductile iron, cast steel, bronze,brass, stainless steel, aluminium alloy)



自锚式管件DN50-DN1800
Self-Anchored Fittings DN50-DN1800



全盘四通DN50-DN2600
All Flanged Cross DN50- DN2600



喷环氧树脂漆
SPRAY EPOXY PAINT



表面喷锌
Zinc sprayed on the surface

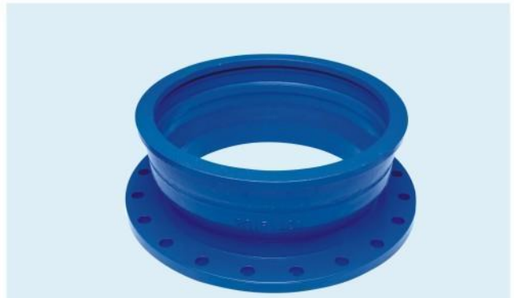

盘承短管DN50~DN2600
Flange Socket Pipe DN50- DN2600



自锚式管件DN50-DN1800
Self -Anchored Coupling



内衬水泥+外涂沥青漆
Cement lining + asphalt coating



静电环氧树脂粉末喷涂
Electrostatic epoxy powder spraying



承插单支盘三通DN50~DN2600
Socket Spigot Tee with Flange Branch



盘插短管DN50-DN2600
Flange Spigot Pipe DN50-DN2600



制动格兰（PVC）
Brake gland (PVC)



制动格兰（DI）
Brake gland (DI)